N° 21,184 A.D. 1896

Date of Application, 24th Sept., 1896—Accepted, 4th Sept., 1897

COMPLETE SPECIFICATION.

An Apparatus for the Transport of Sick Beds, Couches, and the like.

I, Ernst Schlag, of 3 Rosenstrasse, Schweidnitz, in the Empire of Germany, Master Builder do hereby declare the nature of this invention and in what manner the same is to be performed to be particularly described and ascertained in and by the following statement:—

The present invention relates to an Apparatus by means of which a bedstead of ordinary construction can be rendered easily transportable, and thereby enabling patients to be conveyed from place to place without the necessity of leaving their beds. The new transporting apparatus is illustrated in the accompanying drawing:—

Fig. 1 is a front view of the apparatus.

Fig. 2 a front view of a detail relating to a lever arrangement.

Fig. 3 a side view and partial section through Fig. 3.

Fig. 4 shows the application of the lever arrangement.

An arched frame *a*, having two catches *b* & *c*, which are intended to take hold under the front end of the bedstead A is carried on a vertical stay *d*, at the upper end of which is a handle *e*. On the rod *d* towards the top is a movable catch *f*, which is so arranged as to clasp over the upper edge of the end of the bed. The arched frame *a* is capable of being raised by means of a hand-wheel *g*, so as to be easily adjustable to the height between the lower edge of the end of the bed *d* and the floor of the room. The rod *d* is mounted on a carriage frame *h*.

The operation of the apparatus is as follows:—

Under each of the two ends of the bed-stead one of the contrivances described above is placed, and by the setting in motion of the hand-wheel *g*, the catches *b* are pushed under the bottom and the catch *f* over the top edge of the front end *d*.

The lever, to the end of which is fixed a cam *b*, is now pressed upwards. This cam is so arranged as to butt against the arched frame *a*, so that when the lever is pressed upwards the whole frame *a* is raised, so that the feet *m* of the bedstead are removed from the floor, and the whole bed rests on the carriage *h*, on which it can now be removed.

Having now particularly described and ascertained the nature of my said invention and in what manner the same is to be performed I declare that what I claim is:—

(1) The Apparatus for the transport of Sick-beds, couches and the like substantially as set forth.

Dated this 24th day of September 1896.

ERNST SCHLAG.

Per J. G. Lorrain, C.P.A.,
Norfolk House, Victoria Embankment, London, W.C., Filing Agent.

Redhill: Printed for Her Majesty's Stationery Office by Malcomson & Co., Ltd.—1897.
[*Price* 8*d*.]

WELLCOME LIBRARY

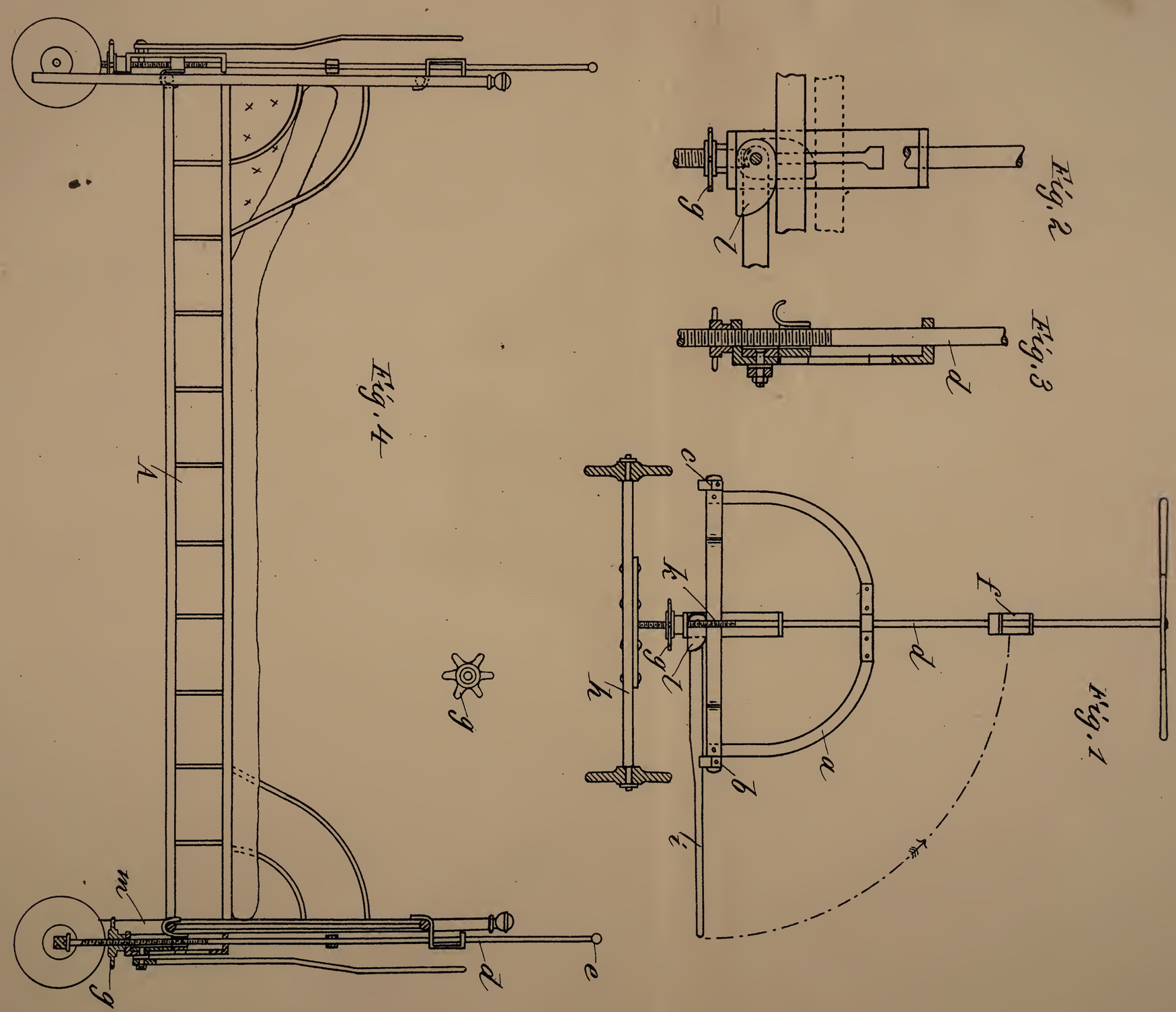

[This Drawing is a full-size reproduction of the Original.]

Malby & Sons, Photo-Litho.